CAD FILE:

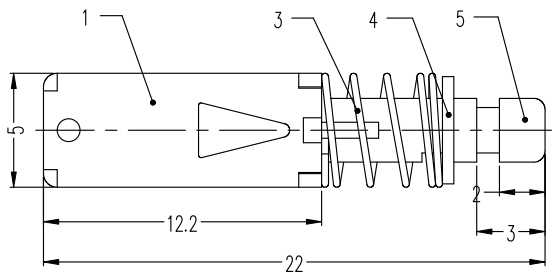

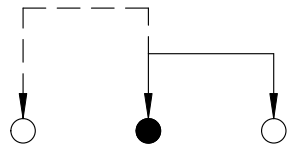

SCHEMATIC (NON-SHORTING)

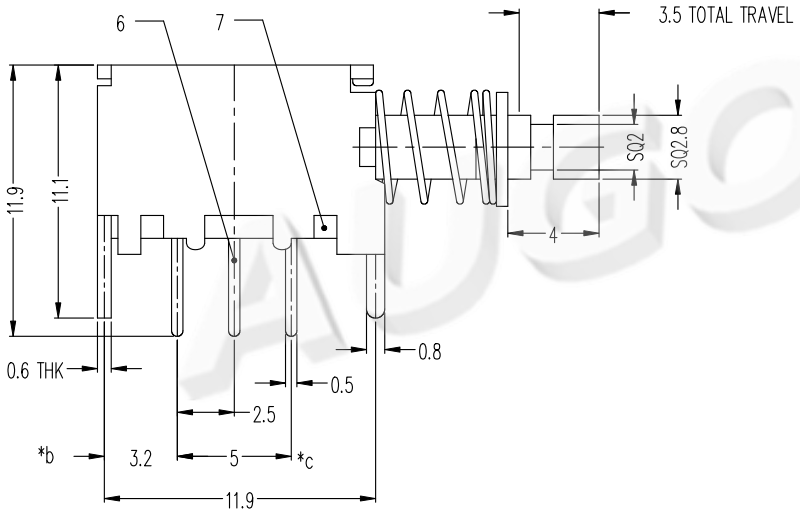

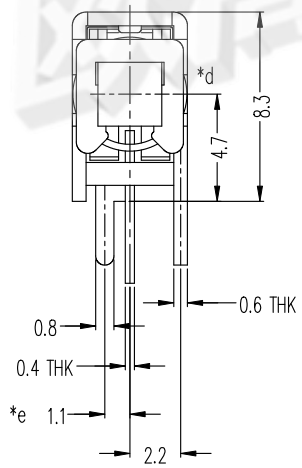

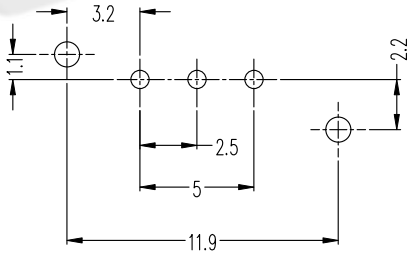

P.C.B LAYOUT
BOTTOM VIEW

注:"*"表示关键尺寸(5个).

NO.	PARTS	MATERIALS	Q'TY	FINISHING
9	CONTACT CLIP	PBS C5210R-EH	1	Ag CLAD
8	SPRING PLATE	PBS STRIP	1	NATURAL
7	BASE	PHENOLIC RESIN	1	NATURAL
6	TERMINAL	BRASS STRIP	3	Ag PLATED
5	KNOB	PA66	1	BLUE
4	BLOCK	STEEL STRIP	1	Ni PLATED
3	SPRING	STEEL WIRE	1	Ni PLATED
1	FRAME	STEEL STRIP	1	Ni PLATED

TOLERANCE UNLESS SPECIFIED				
WITHIN 1.5mm : ±0.1mm	A	2012-8-22	初 版	
OVER 1.5mm : ±0.2mm	ISSUE	DATE	DESCRIPTIONS OF REVISION	APPD.

TITLE : PUSH SWITCH	UNIT : mm	DRWG NO.: AUGO-PS-12E15	
MODEL: PS-12E05	SCALE: 3:1	DWN.	2012-8-22
东莞市欧高电子有限公司 DONGGUAN AUGO ELECTRONICS CO.,LTD.		CHK'D	
		APPD.	